Baština Akademije nauka i umjetnosti Bosne i Hercegovine

Aplikacija industrije 4.0 – prilika za novi iskorak u svim industrijskim granama / Application of Industry 4.0 – an opportunity for a new step forward in all industrial branches

Karabegović, Isak

2022-04-13

Akademija nauka i umjetnosti Bosne i Hercegovine

https://bastina.anubih.ba/items/ef639a0f-0fbc-42af-b6aa-71bcfe482b1d

Preuzeto s Baštine Akademije nauka i umjetnosti Bosne i Hercegovine

https://bastina.anubih.ba/

Baština Akademije nauka i umjetnosti Bosne i Hercegovine

Aplikacija industrije 4.0 – prilika za novi iskorak u svim industrijskim granama / Application of Industry 4.0 – an opportunity for a new step forward in all industrial branches

Karabegović, Isak

2022-04-13

Akademija nauka i umjetnosti Bosne i Hercegovine

https://bastina.anubih.ba/items/ef639a0f-0fbc-42af-b6aa-71bcfe482b1d

Preuzeto s Baštine Akademije nauka i umjetnosti Bosne i Hercegovine

https://bastina.anubih.ba/

DOI: 10.5644/PI2022.202.25

Dimensional accuracy and tolerances in additive manufacturing

Samir Lemeš[1*], NerminaZaimović-Uzunović[2], Ernad Bešlagić[3], Kenan Varda[4]

Abstract: *Important quality indicators for products made by Additive Manufacturing (AM) methods include dimensional accuracy, tolerances, and surface roughness. This paper describes a novel benchmark part designed and manufactured by a Low Force Stereolithography (LFS) 3D printer and controlled on a coordinate measuring machine. The benchmark part contains basic geometric shapes used to check the deviation from the nominal dimensions and given features from the 3D CAD model. We have developed an automatic measurement strategy based on a 3D object model and a control plan based on previously defined allowable tolerances. We have measured the deviation from nominal dimensions, positions, and form, including cylindricity, flatness and parallelism. The results revealed large deviations in dimensions and acceptable deviations in the shape of a manufactured benchmark part.*

Keywords*: Additive manufacturing, dimensional accuracy, tolerances, CMM.*

1. Introduction

Dimensional accuracy, tolerances and surface roughness are essential quality indicators in production with Additive Manufacturing (AM) methods. The maximum feature resolution that is typically achievable on extrusion AM systems is on the order of 0,1 mm [1]. The dimensional accuracy depends on system parameters, such as accurately regulating the material flow rate from the print nozzle. Another source of dimensional error in parts made with extrusion AM methods is thermal warping and shrinkage [1].
Many authors investigated the dimensional and geometric accuracy of AM processes and products. Turner and Gold [1] focused on the relationship between process and product design parameters and finished parts' dimensional and surface properties. They identified thermal warping and shrinkage as significant sources of dimensional error in finished products. They also proved that product design parameters particularly slice height, strongly impact surface roughness. Lee et al. in [2] reviewed the state-of-the-art research related to the dimensional accuracy in AM processes, showing a diversity of process types and a variety of issues affecting dimensional accuracy. Even though AM has immense potential for broader application beyond the current high-value and complex products, it is constrained due to relatively low dimensional accuracy and lack of methodologies. Yasa and Ersoy analysed the dimensional accuracy and mechanical properties of chopped carbon-reinforced polymers produced by the Fused Filament Fabrication (FFF) method [3]. Their results showed a severe level of anisotropy in the mechanical properties, especially the modulus of elasticity, due to the insufficient fusion between deposited layers in the build direction, and that appropriate compensation

[*1]University of Zenica, Polytechnic Faculty, 72000 Zenica, Bosnia and Herzegovina
[2,3,4]University of Zenica, Faculty of Mechanical Engineering, 72000 Zenica, Bosnia and Herzegovina
E-mail: samir.lemes@unze.ba

techniques could enhance the dimensional accuracy for some features. Minetola et al. [4] presented a benchmarking analysis of three different AM systems for polymers: fused filament fabrication (FFF), selective laser sintering (SLS) and Arburg plastic free-forming (APF). They proved that smaller layer thickness provides a better definition of the geometry of the features and higher dimensional accuracy of the part dimensions.

Maurya et al. [5] analysed the process parameters: layer thickness, raster angle and orientation on the linear and radial dimension of Poly Lactic Acid (PLA) component. They used the Gray relational analysis (GRA) to determine optimum process parameter conditions, which optimise both linear and radial dimensions. They observed that the linear size had a smaller IT grade than the radial dimension due to triangulation error. They also observed that shrinking occurs during the cooling phase. The dimensional inaccuracy in the radial measurement is larger than the linear dimension due to the slicing and squaring of edges. Baturynska performed statistical analysis of dimensional accuracy in additive manufacturing considering polymer laser sintering STL model properties [6], showing that regression models can be used to minimise shrinkage effect by proposing scaling ratio for each specimen in the build separately. Vyavahare and Kumar studied the influence of five FDM process parameters: layer thickness, wall print speed, build orientation, wall thickness and extrusion temperature on response characteristics [7]. They concluded that layer thickness, wall print speed and build orientation are significant process parameters for the dimensional accuracy of FDM parts. Accuracy first decreases and then increases with an increase in wall print speed, and it increases with an increase in wall thickness, layer thickness, wall print speed and build orientation. An increase in extrusion temperature first increases and then decreases dimensional accuracy along the height direction of FDM parts. Ahmad in [8] applied the Taguchi method to achieve the optimum accuracy of the 3D printed part. The result has shown that print pattern, orientation, support angle and sidewalk offset affect the dimension accuracy of the product. Softić et al. in [9] used CMM and a measuring scanner to analyse a product made by 3D printing. They demonstrated that more accurate CMM measurements are better for larger products, but optical measurements have difficulty capturing small details on the measuring object. Gaikwad et al. in [10] compared the components 3D printed by Fused Deposition Modelling (FDM) and Stereolithography (MSLA). They investigated dimensional deviation for geometric dimensions and geometric tolerances, such as straightness, flatness, perpendicularity, concentricity, circularity, etc. They concluded that the FDM shows less dimensional deviation than MSLA, and the MSLA shows less geometric deviation than FDM.

Kačmarčik et al. created a benchmark FDM part, whose size, form, orientation, and location accuracy of various features were measured using a Coordinate Measuring Machine (CMM) [11]. The benchmark part was printed on two different FDM desktop 3D printers, indicating that a simple benchmark part can assess the accuracy of a variety of geometrical properties. Fahad and Hopkinson developed the benchmark part [12] to evaluate the accuracy and repeatability of AM process. Their benchmark includes features such as a sphere, hollow cylinder, cube, cone, angled surfaces and flat base, allowing the measurement of repeatability of features by incorporating the features in a symmetrically repeatable manner. Al-Ahmari et al. quantified the various sources of errors that contribute to the poor accuracy of FDM fabricated parts [13]. Flatness was affected by the residual stresses that caused buckling in the product. Inconsistencies in

the platform motion created eccentricity and roundness errors in the cylindrical features. The diameter of pins and holes varied due to the mismatch between the generated tool path and the extrusion speed. Geometric errors of the respective linear axes of X and Y caused inaccurate pins and hole locations. The manufacturing accuracy was better when the features were fabricated on the horizontal face compared to the vertical face. Finally, a better surface finish was observed on the top surface compared to the side surface because of the staircase effect. All these results have shown a need to investigate further the dimensional accuracy, position and shape tolerances of products made by AM processes.

2. Design and manufacturing of the benchmark part

The first step in developing the benchmark part is the design of representative geometry, which could be used to perform the geometric control, specific dimensions and shape deviations. In addition to dimensions control, some basic and most common deviations from the form were controlled: parallelism, flatness and cylindricity. For manufacturing the benchmark part, we decided to use the Low Force Stereolithography (LFS) technology to get more accurate product geometry.

2.1. 3D CAD model

We used SolidWorks to design the benchmark part, taking into account the limitations imposed by the 3D printer. The maximum length and width allowed by the printer are 130 mm, so the benchmark part is modelled within these limits. We tried to introduce as many different dimensions as possible to show the impact of 3D printing and deviations from nominal values. Figure 1 shows a 3D model of a benchmark part used for printing and measurement control. Benchmark part consists of three walls, a cross and a cube in the centre and three cylinders, one on the left and two on the right side.

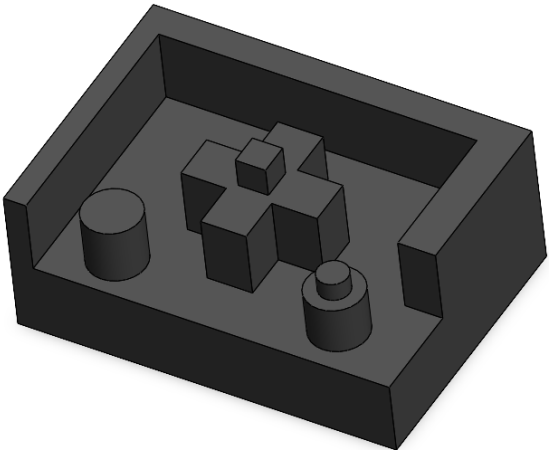

Figure 1. 3D CAD model of benchmark part

After creating the 3D model of the benchmark part, we have defined the features of interest to be controlled in the measurement strategy. The benchmark part defines 20 elements, planes, and cylinders, which will serve as a reference for creating automatic measurement strategies and control of dimensions and shapes. We marked them with the designation F1 to F20, used further in the paper. Table 1 shows the labels and full names of the features to understand them better. Also, in this table, dimension labels and feature labels related to dimensions are pointed out.

Table 1. Features and dimensions of interest

Feature label	Feature full name	Dimension label	Features related to dimensions
F1	Left surface	D1	F1; F3
F2	Back surface	D2	F2; F4
F3	Right surface	D3	F1; F5
F4	Front surface	D4	F2; F6
F5	Left wall surface	D5	F3; F7
F6	Back wall surface	D6	F5; F7
F7	Right wall surface	D7	F6; F4
F8	Bottom surface	D8	F6; F12
F9	Top wall surface	D9	F14; F4
F10	Top cross surface	H1	F8; F9
F11	Top cube surface	H2	F8; F10
F12	Back cross surface	H3	F8; F11
F13	Back-left cross surface	H4	F8; F15
F14	Front cross surface	H5	F8; F16
F15	Top left cylinder surface	H6	F8; F17
F16	Top right cylinder surface	A1	F12; F13
F17	Top right small cylinder surface		
F18	Left cylinder		
F19	Right large cylinder		
F20	Right small cylinder		

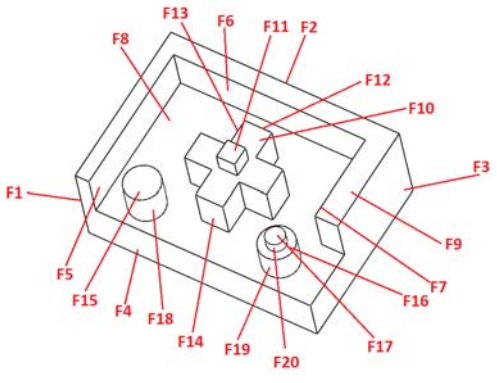

Figure 2.Marksof feature labels

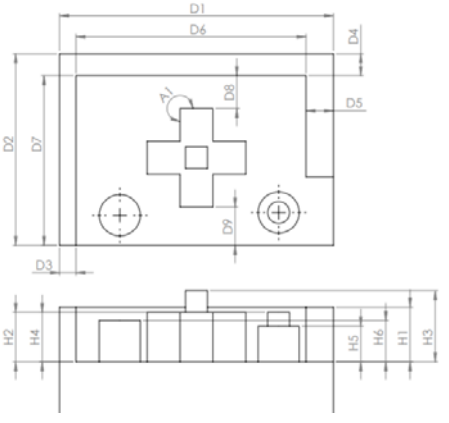

Figure 3. Dimensions of interest

Figure 2 shows marks of these 20 features. We controlled the flatness and parallelism for every of the first 17 features, and cylindricity for the rest of the three cylindrical features. Figure 3 shows labelled dimensions controlled. Labels D1 to D9 are used for length, labels H1 to H6 for height and A1 for the angle. The next step was to manufacture the benchmark part using the 3D printer FormLabs Form3.

2.2. Stereolithography

Stereolithography is a particular technology concerning how the object is positioned relative to the printing platform. The technology is very complex and sensitive, using the laser beam to treat the resin inside the material pool. The model needs to be positioned on the platform, immersed inside the reservoir with resin, so that no liquid part of the resin is retained in the gaps and channels inside the model. We decided to place the benchmark part in the model preparation environment directly on the printing platform. In the design phase, we were cautious not to leave any counter cones or gaps that could negatively affect the process of 3D printing. Figure 4 shows the preparation of the benchmark part for printing in software Form3.

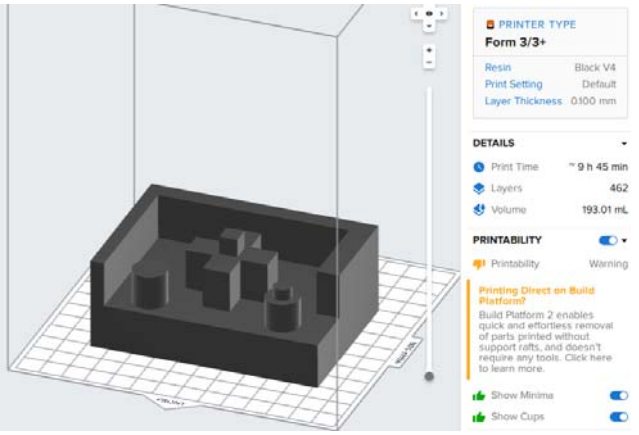

Figure 4. Preparation of benchmark part for 3D printing

We printed the model without supports. The previous experience with the 3D printer FormLabs Form3 revealed that the reinforcements placed on the model to avoid laying the model directly on the printing platform leave traces after their removal. These traces, in many ways, primarily affect the quality of surface treatment and control of flatness, so in this case, we have decided not to use them. Table 2 shows the printing parameters.

Table 2. Printing parameters

Printing parameter	Value	Printing parameter	Value
Material	Resin V4	Alcohol treatment	30 min
Material quantity	193,01 mL	Thermal treatment	10 min, 60 °C
Printing time	9h 45m	Layers	462
Material colour	Black	Layer thickness	0,1 mm

We first treated the printed benchmark part in isopropyl alcohol for 30 minutes and then thermally by UV lighting for 10 minutes at 60°C. After this procedure, the benchmark part was ready for measurement by the Coordinate Measuring Machine.

3. CMM measurement strategy

We have controlled the dimensions and form by using Coordinate Measuring Machine Carl ZeisContura G2. First, the 3D printed benchmark part was positioned and glued to the metal support. In such a way, 3D printed part is fully fixed, and force induced by the measurement probe VAST XT does not affect the measuring results. Figure 5 shows positioned 3D printed part on the metal support. The bottom surface of the model is inaccessible in such a position, but that is not relevant for this research, as all features of interest are on other sides of the benchmark part.

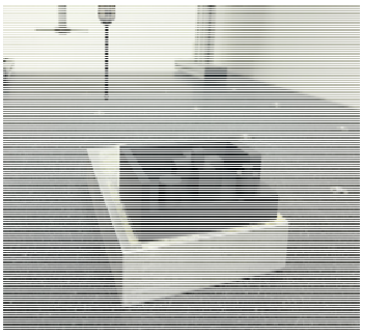

Figure 5. Benchmark part positioned on CMM

ANU BiH АНУ БиХ

All 20 features mentioned above are determined in the space as planes and cylinders in a rough way using a theoretically sufficient number of references. A virtual model for measurements was created and shown in Figure 6. We have developed the strategies for automatic measurements based on these references.

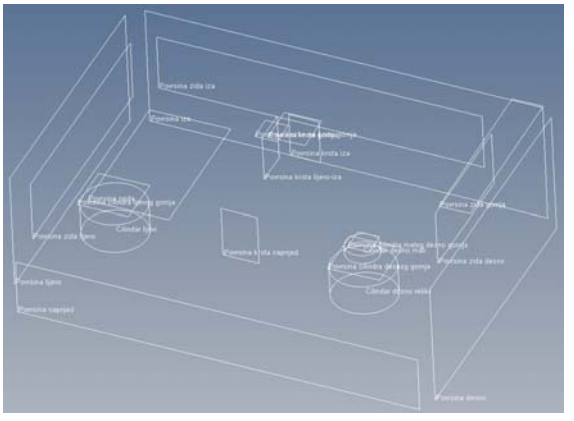

Figure 6. Virtual model for measurements

All measuring strategies were executed, and the actual number of points for each measurement strategy was recorded using the probe with a radius of 1,49 mm. We used these results to determine deviations of form and dimensions, as presented in Tables3 and 4.

Table 3. Measuring results - dimensions(mm)

Dimension	Features	Nominal value	Actual value	Deviation
Distance	F1; F3	100,0000	99,9113	0,0887
Distance	F2; F4	70,0000	69,7900	0,2100
Distance	F1; F5	6,0000	5,7347	0,2653
Distance	F2; F6	8,0000	8,0029	-0,0029
Distance	F3; F7	10,0000	9,6401	0,3599
Distance	F5; F7	84,0000	84,5364	-0,5364
Distance	F6; F4	62,0000	61,7871	0,2129
Distance	F6; F12	12,0000	12,7196	-0,7196
Distance	F14; F4	14,0000	13,3041	0,6959
Height	F8; F9	20,0000	20,2951	-0,2951
Height	F8; F10	18,0000	17,9850	0,0150
Height	F8; F11	26,0000	25,2937	0,7063
Height	F8; F15	15,0000	14,9148	0,0852
Height	F8; F16	13,0000	13,1298	-0,1298
Height	F8; F17	18,0000	18,1546	-0,1546
Angle	F12; F13	270,000°	270,139°	-0,1397

Table 4. Measuring results– form (mm)

Form	Features	Actual value	Form	Features	Actual value
Flatness	F1	0,0931	Cylindricity	F18	0,0551
Flatness	F2	0,0811	Cylindricity	F19	0,0441
Flatness	F3	0,1119	Cylindricity	F20	0,0425
Flatness	F4	0,0767	Parallelism	F1; F3	0,1383
Flatness	F5	0,0737	Parallelism	F2; F4	0,1188
Flatness	F6	0,0555	Parallelism	F5; F7	0,1004
Flatness	F7	0,0340	Parallelism	F1; F5	0,1309
Flatness	F8	0,0312	Parallelism	F2; F6	0,0713
Flatness	F9	0,0210	Parallelism	F3; F7	0,0799
Flatness	F10	0,0108	Parallelism	F8; F9	0,0871
Flatness	F11	0,1771	Parallelism	F8; F15	0,0576
Flatness	F12	0,0277	Parallelism	F8; F16	0,1386
Flatness	F13	0,0224	Parallelism	F8; F17	0,0357
Flatness	F14	0,0220			
Flatness	F15	0,0090			
Flatness	F16	0,0105			
Flatness	F17	0,0051			

ANU BiH АНУ БиХ

4. Discussion

During the preparation of the benchmark part, 3D printing and heat treatment of the object, one could visually notice less bending on the walls and bottom surface of the model. This phenomenon is related to length and width measurements. The same phenomenon was not observed in the measurement of the height of the benchmark part. During the implementation of measurement strategies, we have emphasised the control of flatness. In the graphical presentation of the flatness measurement results, one can notice the bending of flat surfaces in length and width, as shown in Figure 7.



Figure 7. Graphical representation of flatness measurement results

The results of flatness deviations reveal that the most significant value of flatness deviation is 0.1771 mm, which was recorded on the highest surface appearance of the model. The smallest flatness deviation is 0.0051 mm, and it was recorded on the smallest cylindrical surface. We can conclude that the size of the surface used for flatness control does not affect the results to a great extent. On the contrary, the final layers created by the 3D printing process result in a significant deviation from flatness. Analogous to the analysis of the results of deviations from flatness, we can conclude that the same bending phenomenon greatly influences the deviations from parallelism. The most significant deviation from parallelism is 0.1386 mm. It was recorded when the right cylindrical surface deviated from the bottom of benchmark part floor. The smallest deviation from parallelism was 0.0357 mm, occurring when the smallest cylindrical surface deviated from the floor. This is where the smallest deviation from the flatness was recorded. The maximum deviation from the cylindricity was 0.0551 mm, and we can see that this order of magnitude is relatively small. In measuring dimensions, length, width and height, the deviations varied considerably, and the values obtained were not negligible.When measuring length, the most significant deviation from the nominal dimension is 0.7196 mm, and the smallest deviation is 0.0029 mm. The smallest deviation from the nominal dimensions occurred on the model's walls.The most significant dimensional deviation from the height is 0.7063 mm, and the smallest is 0.015 mm. The deviation from the angle of 270° between the two flat surfaces was 0.1397°.

5. Conclusion

By modelling, manufacturing, post-processing and controlling the dimensions and form of the benchmark part, we can conclude that a Low Force Stereolithography (LFS) technology, using resins, creates models of polished surfaces and good finishes. One of the most significant disadvantages of this technology is the post-processing of 3D printed parts, where the model is chemically treated with alcohol and thermally treated with UV lamp. The deviation from the flatness is visible on the model, both before and after the chemical and heat treatment. The positioning of the model on the printing platform and inside the resin is one of the important factors in creating models with Stereolithography. This paper shows that specific dimensions and forms are obtained within small tolerances if they are positioned so that the support of the object is stable and that measures of length and width are vertically positioned, to reduce the impact of heat treatment and bending. In general, the total deviation between the most significant positive and negative deviation of distance is over 1.5 mm, which is a considerable

deviation for a piece of small dimensions. Regarding the form deviations, the results are much better, and an apparent deviation occurs in the zones of influence of heat treatment and the phenomenon of model bending.

6. References

[1] Turner, B.N. and Gold, S.A. (2015), "A review of melt extrusion additive manufacturing processes: II. Materials, dimensional accuracy, and surface roughness", *Rapid Prototyping Journal*, Vol. 21 No. 3, pp. 250-261. doi: 10.1108/RPJ-02-2013-0017

[2] Lee, P. H., Chung, H., Lee, S. W., Yoo, J., & Ko, J. (2014, June). Dimensional accuracy in additive manufacturing processes. In *International Manufacturing Science and Engineering Conference* (Vol. 45806, p. V001T04A045). American Society of Mechanical Engineers.

[3] Yasa, E., & Ersoy, K. (2019). Dimensional accuracy and mechanical properties of chopped carbon reinforced polymers produced by material extrusion additive manufacturing. *Materials*, 12(23), 3885. doi: 10.3390/ma12233885

[4] Minetola, P., Calignano, F., & Galati, M. (2020). Comparing geometric tolerance capabilities of additive manufacturing systems for polymers. *Additive Manufacturing*, 32, 101103. doi: 10.1016/j.addma.2020.101103.

[5] Kumar Maurya, N., Rastogi, V., & Singh, P. (2019). Investigation of dimensional accuracy and international tolerance grades of 3D printed polycarbonate parts. Materials Today: Proceedings. doi:10.1016/j.matpr.2019.06.007

[6] Baturynska, I. Statistical analysis of dimensional accuracy in additive manufacturing considering STL model properties. *Int J Adv ManufTechnol* 97, 2835–2849 (2018). doi: 10.1007/s00170-018-2117-4

[7] Vyavahare, S., Kumar, S., &Panghal, D. (2020). Experimental study of surface roughness, dimensional accuracy and time of fabrication of parts produced by fused deposition modelling. *Rapid Prototyping Journal*, (ahead-of-print). doi:10.1108/rpj-12-2019-0315

[8] Ahmad M.N., Mohamad A.R. (2021) Analysis on Dimensional Accuracy of 3D Printed Parts by Taguchi Approach. In: Zakaria M., Abdul Majeed A., Hassan M. (eds) *Advances in Mechatronics, Manufacturing, and Mechanical Engineering*. Lecture Notes in Mechanical Engineering. Springer, Singapore. doi: 10.1007/978-981-15-7309-5_22

[9] Softić A., Bašić H., Baljić K. (2021) A Comparison of the CMM and Measuring Scanner for Printing Products Geometry Measurement. In: Karabegović I. (eds) *New Technologies, Development and Application IV. NT 2021*. Lecture Notes in Networks and Systems, vol 233. Springer, Cham. https://doi.org/10.1007/978-3-030-75275-0_34

[10] Gaikwad, S. R., Pawar, N. H., &Sapkal, S. U. (2021). Comparative evaluation of 3D printed components for deviations in dimensional and geometrical features. *Materials Today: Proceedings*. (In Press, Corrected Proof) doi: 10.1016/j.matpr.2021.11.157

[11] J. Kacmarcik, D. Spahic, K. Varda, E. Porca, N. Zaimovic-Uzunovic, An investigation of geometrical accuracy of desktop 3D printers using CMM, IOP Conf. Ser.: Mater. Sci. Eng. 393 (1) (2018) 393–401.
[12] Fahad, M., & Hopkinson, N. (2012). A new benchmarking part for evaluating the accuracy and repeatability of Additive Manufacturing (AM) processes.2nd International Conference on Mechanical, Production and Automobile Engineering (ICMPAE'2012) Singapore April 28-29, 2012
[13] Al-Ahmari, A., Mian, S.H., & Ameen, W. (2021). Performance assessment of fused deposition modeling process. The Journal of Engineering Research, 9.

ANU BiH АНУ БиХ